JAIDEV EDUCATION SOCIETY'S

J D COLLEGE OF ENGINEERING AND MANAGEMENT

KATOL ROAD, NAGPUR

Affiliated to DBATU, RTMNU & MSBTE, Mumbai

Website: [illegible] E-mail: [illegible]

Education to Eternity

An Autonomous Institute, with NAAC "A" Grade

Department of Computer Science & Engineering

"A place to learn; A chance to grow"

Session: 2024-25

MID SEM-1 EXAMINATION

Course: B. Tech. in Computer Science & Engineering **Year/Semester:** 2nd /4th

Subject: Formal Languages & Automata Theory **Subject Code:** CS4T001

Max Marks:20 **Date: 03/03/2025** **Duration: - 1 Hr.**

Instructions to the Students:

1. **All the questions carry marks as indicate.**
2. **Assume suitable data whenever necessary.col**
3. **Illustrate your answer whenever necessary with the help of neat sketches.**

Students should be able to:

CO1. Define the mathematical principles behind theoretical computer science.

CO2. Differentiate and give examples for the different types of automata like finite automata, push down automata, linear bounded automata and Turing machine.

CO3. Correlate the different types of automata to real world applications.

CO4. Choose and design appropriate automata for the different requirements outlined by theoretical computer science.

CO5. Identify the different computational problems and their associated complexity.

SECTION A

1. **All Questions are compulsory.**
2. **Answer in one word/sentence.**

Q. No.	Questions	Level/CO Mapped	Marks
Q.1	Design the DFA over $\sum=\{0,1\}$, which accepts the string '0011' only.	L2/CO2	1
Q.2	Differentiate between NFA and DFA.	L1/CO1	1
Q.3	State the Arden's theorem.	L1/CO1	1
Q.4	Write the regular expression for the set of strings of {0,1} containing 010 as a substring.	L2/CO2	1

SECTION B

1. **All Questions are compulsory.**
2. **Solve answer in brief (two, three Sentence)**

Q.5	Write any eight identities for regular expression.	L1/CO2	2
Q.6	Prove that $(1+00^*1)+(1+00^*1)(0+10^*1)(0+10^*1) = 0^*1(0+10^*1)^*$	L1/CO1	2

P P Q Q Q

$(1+0^*1)+(1+0^*1)(0+10^*1)(0+10^*1)$

$(1+00^*1)+(1+00^*1)(0+10^*$

Q.7 Convert the following NFA to its equivalent DFA. L1/CO1 2

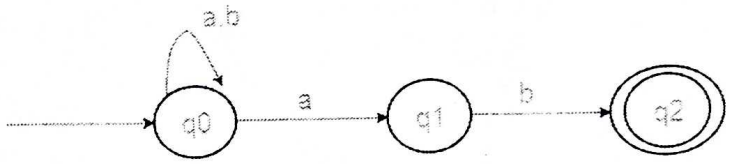

Q.8 Convert following Moore machine into equivalent Mealy machine. L1/CO2 2

Present state	Next state		Output
	0	1	
A	A	B	0
B	B	C	1
C	C	D	0
D	D	A	0

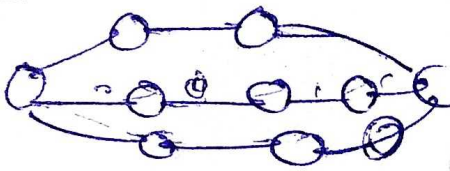

SECTION C

1. **Solve any two questions.**

Q.9 Construct the finite automata for the regular expression 1+00+010*1. L1/CO3 4

Q.10 Derive the regular expression for the automata given below. L2/CO3 4

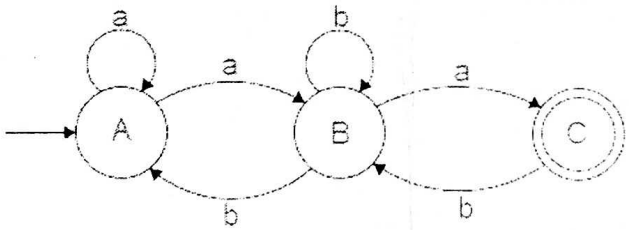
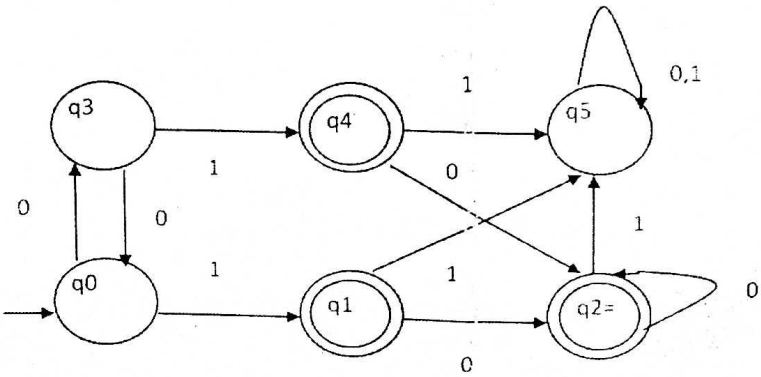
Q.11 Minimize the following finite automata. L1/CO2 4